LED TYPE 150 POWER FEED

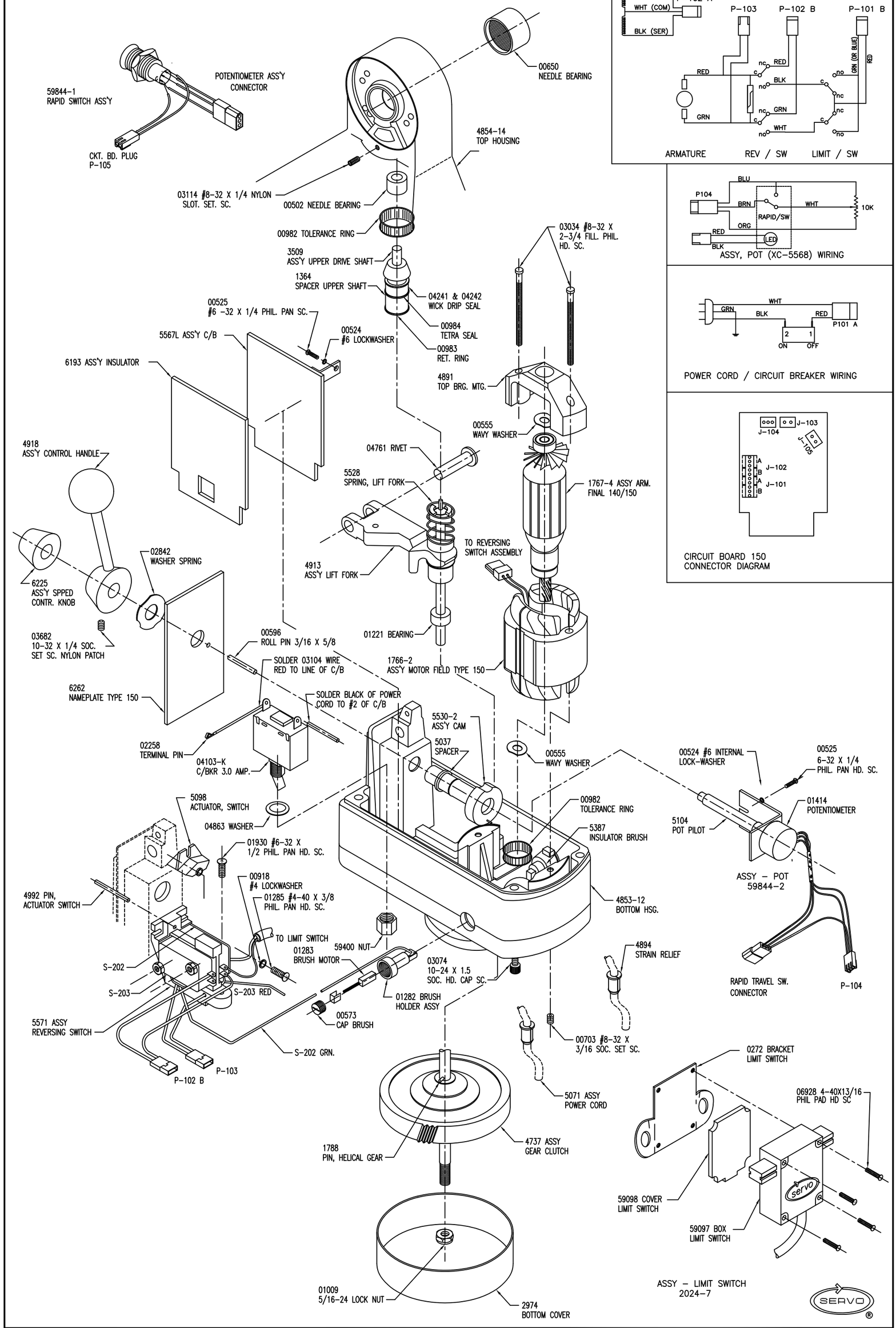

DWG. NO. : 6293L

TYPE 150 SERVO DRIVE